WEIGHT:	105 LBS
CAPACITY:	87 GALLONS

NOTE: Not to Scale. All dimensions are based on manufacturers and industry standards of ± 3/8 inch.

UPDATED: 4/14

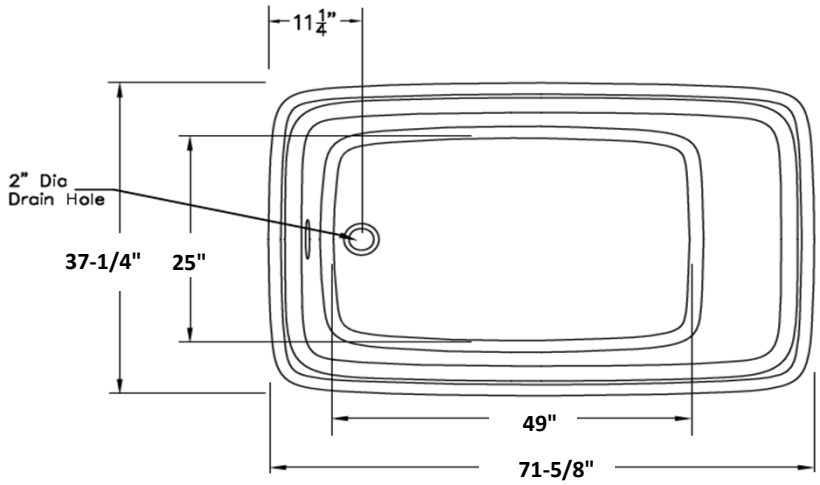

TOP VIEW

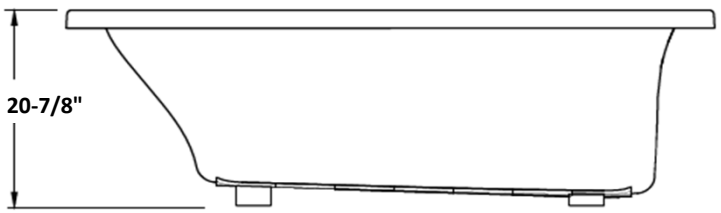

SIDE VIEW

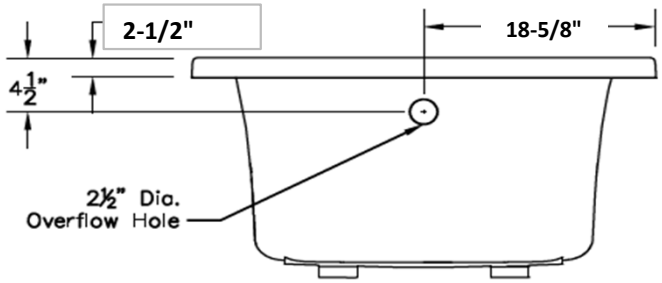

END VIEW

BRAZOS VI